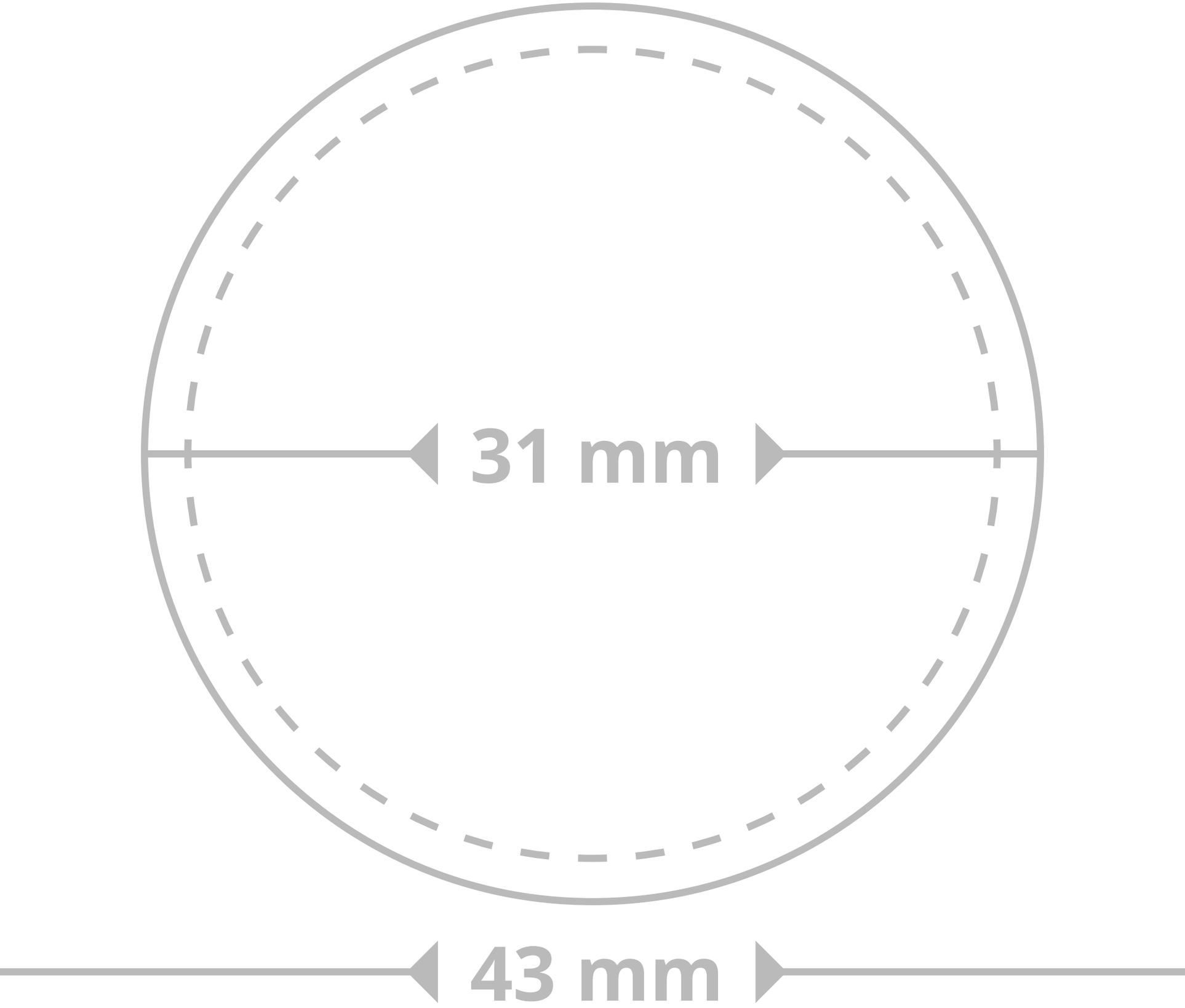
31 mm
43 mm